SIEMENS

Cerberus® CerGas
Gas Detection

Basics

Cerberus
Security
for People
and Assets

Siemens Building Technologies
Cerberus Division

Data and design subject to change without notice. / Supply subject to availability .
© Copyright by
Siemens Building Technologies AG

We reserve all rights in this document and in the subject thereof. By acceptance of the document the recipient acknowledges these rights and undertakes not to publish the document nor the subject thereof in full or in part, nor to make them available to any third party without our prior express written authorization, nor to use it for any purpose other than for which it was delivered to him.

1 Physics and Chemistry of Gases 1
1.1 Introduction 1
1.2 Chemical Elements and Molecules 1
1.3 Physical Properties of Matter 2

2 Principles of Gas Detection 4
2.1 Introduction 4
2.2 Sensors used for CerGas 4

3 Explosion Protection and TLV–Control 9
3.1 Introduction 9
3.2 Explosion Protection 9
3.3 TLV Control 12

4 Appendix 13
4.1 Glossary 13
4.2 Properties of common combustible substances 15
4.3 Properties of some toxic gases 16
4.4 Bibliography 16

Changes	Description
1505 c	SIEMENS layout new.

1 Physics and Chemistry of Gases

1.1 Introduction

Every common form of matter consists of small particles called atoms. Their inner structure determines the properties of the substance.
An atom contains a positively charged **atomic nucleus** and a negatively charged **electron shell**. All chemical reactions take place in the electron shell, leaving the atomic nucleus unchanged. This nucleus consists of positively charged protons and electrically neutral particles called neutrons. The diameter of the nucleus is of the order of 10^{-15}m whereas the electron shell has a size of some 10^{-10}m. If we imagine the nucleus enlarged to 1mm, the corresponding atomic diameter would be 100m!

1.2 Chemical Elements and Molecules

1.2.1 General

A chemical element is an accumulation of atoms that have the same **atomic number** i.e. the same number of protons in the nucleus. The elements are classified under rising atomic numbers in the **periodic system**.
Examples are Carbon (**C**), Hydrogen (**H**), Oxygen (**O**), Nitrogen (**N**), etc.
The atoms of one element can form chemical bonds with each other or with another element. This bond is formed by one or more electron pairs which both atoms have in common.

Examples : $H + H \rightarrow H2$ (Hydrogen Gas)
$N + 3H \rightarrow NH_3$ (Ammonia)
$C + 4H \rightarrow CH_4$ (Methane)

These combined particles are called **molecules**.
In nature many substances occur in the form of molecules. Exceptions are the noble gases Helium (**He**), Argon (**Ar**), Krypton (**Kr**), etc. or elements that are forming lattices (crystals) like metals or salts (ionic bond). Between molecules only weak attractive forces are operative (Van der Waals forces). For this reason they are forming more or less volatile compounds.

1.2.2 Atomic Quantities

Every atom has a certain mass. Because this quantity is extremely small, a suitable unit is introduced : The **atomic mass unit** (amu), defined as 1/12 the mass of a carbon atom ^{12}C which contains 6 Protons and 6 Neutrons.
To get weighable amounts of substances, very large numbers of atoms have to be considered. The number of particles in 12g of ^{12}C is :

$$\mathbf{N = 6.022 \cdot 10^{23}} \quad \textbf{(AVOGADRO–Number)}$$

This amount of particles is defined as a **mole** of this substance.
For ideal gases a mole occupies (at 0°C and 1013 hPa) a volume of :

$$\mathbf{V_m = 22.4\ l/mole}$$

This **mole volume** is independent of the gas as long as it can be considered ideal, i.e. the molecules move freely and without influencing each other. For most gases of our concern this holds true.

1.3 Physical Properties of Matter

1.3.1 States of Aggregation

All pure substances (composed of atoms or molecules) can be present in **three states of aggregation** :

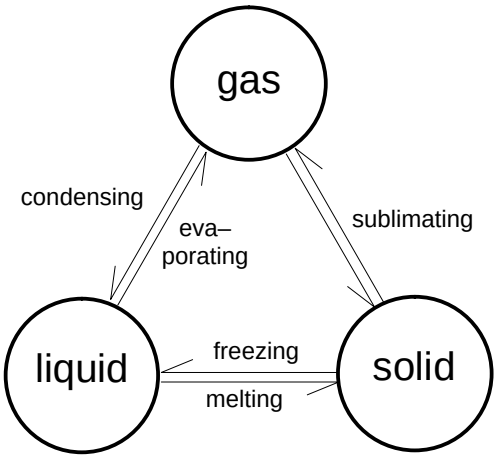

Fig. 1 States of aggregation

The state in which a substance exists depends on the forces between the molecules or atoms and their distances and energy states. These conditions are characterized by pressure and temperature. The term gas, liquid or solid is used for substances that are in the corresponding state at ”**standard conditions**” (usually at 20°C and 1013 hPa). However, many substances can coexist in more than one phase at the same conditions, for example vapour upon the surface of a liquid. The reason for this is that not all particles have the same kinetic energy at a given temperature. So there are always some able to overcome the Van der Waals forces and escape from the liquid phase.

1.3.2 Phase Diagram

The phase diagram is a graphical representation of the phase transitions of a substance depending on temperature and pressure. In the figure below you see the diagram for water.

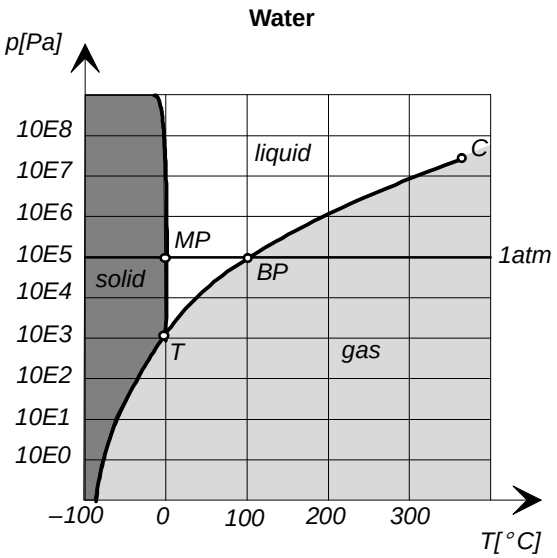

Fig. 2 Phase diagram for water

At the standard pressure of 1 atm = 1013 hPa the temperature of transition between solid and liquid is called **melting point (MP)**. Between liquid and gas this temperature is called **boiling point (BP)**. There exists a point in the diagram where all three states can coexist. This is called the triple point of the substance (T). Above a certain temperature the gas can no longer be liquefied by increasing the pressure. This is called the critical point (C).

1.3.3 Vapour Pressure

A liquid evaporates already below its boiling point. With rising temperature more and more particles change from the liquid to the gaseous phase. If the vessel is open to the atmosphere the liquid will evaporate completely. If the vessel is closed, an equilibrium between evaporating and re–condensing particles is established. The pressure of the vapour–particles against the walls of the vessel is constant (at constant temperature) and is called **saturation vapour pressure**.
When the saturation vapour pressure reaches the pressure of the surrounding air (normally 1 atm), the liquid starts to boil (Fig. 3).

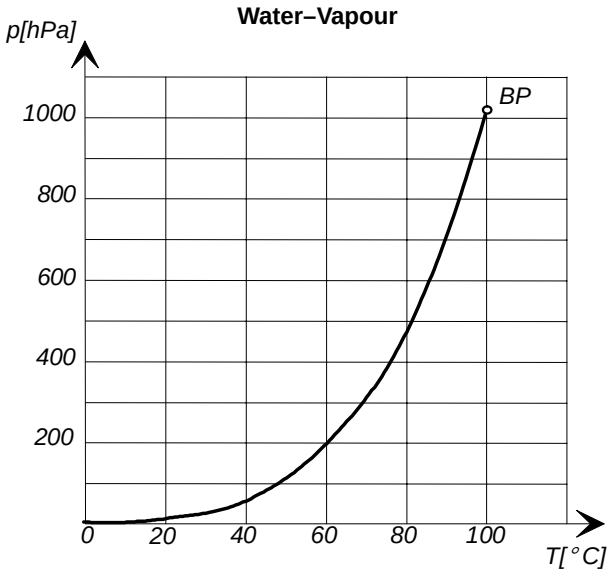

Fig. 3 Saturation vapour of water

1.3.4 Vapour Density

An important criterion for siting gas–detectors is the density of a gas or vapour relative to the surrounding air. For gases lighter than air the detectors have to be installed on the ceiling; for those heavier than air near the floor. The relative density can be calculated as follows:
Dry air is a mixture of Nitrogen (**N_2**), Oxygen (**O_2**), Argon (**Ar**) and negligible traces of other gases.

N_2	**78%**	**28g/mol**
O_2	**21%**	**32g/mol**
Ar	**1%**	**40g/mol**

The mean molecular weight is then calculated as:

$$MW_{air} = \frac{78 \cdot 28 + 21 \cdot 32 + 1 \cdot 40}{100} = 28.96 g / mole$$

Normally 1–2% of water–vapour is present, but its effect on the mean weight of the air is small.
The density ρ_{rel} of a substance with molecular weight *MW* relative to air is defined as:

$$\rho_{rel} = \frac{MW}{MW_{air}}$$

Example of a vapour heavier than air:
Toluol (C_7H_8) with a molecular weight of

$$MW = 7 \cdot 12 + 8 \cdot 1 = 92 g / mole$$

Therefore the relative vapour–density is:

$$\rho_{rel} = \frac{92}{28.96} = 3.18$$

This result does not mean that Toluol vapour, which forms through evaporation above a pool of leaking liquid, is 3.18 times heavier than air. It does not involve purely gaseous Toluol, rather a Toluol–air mixture with a saturated vapour pressure (at 20_C) of ps = 29hPa.

The mean molar–mass MW for this mixture is 30.83 g/Mol, making

$$\rho_{rel} = \frac{30.83}{28.96} = 1.06$$

which is only insignificantly heavier than air.

This characteristic feature in the detection of leaking liquids is, for example, taken into account in the SUVA document 1469.d (see chapter 4.4, page 16).

---

i For the siting of detectors, air currents and the location of possible leakage must be taken into consideration. Usually, however, they should be sited close to the floor where liquids normally collect.

---

2 Principles of Gas Detection

2.1 Introduction

The detection and the measurement of volatile substances like gases, vapours or small particles has attained much importance in the last years. In the chemical industry large quantities of flammable gases and liquids have to be processed safely. An ever growing variety of molecules identified as toxic or carcinogenic have to be monitored and controlled. A wide variety of gas sensors with different measuring principles is used today, each with its specific advantages for the specific applications. Therefore it is very important to know the exact requirements of the user and all relevant ambient conditions to be able to choose the optimal sensor and place it correctly.

2.2 Sensors used for CerGas

2.2.1 Semiconductor Sensors

This solid state gas sensor is mainly composed of sintered tin dioxide (SnO_2) which is heated to some 400°C. If a flammable or toxic gas is present, it gets oxidized on the surface of the sensor element. This process sets free electrons which are increasing the conductivity of the semiconductor. The reaction to the gases depends on temperature and the activity of the sensor. Thereby the sensitivities for certain gases can be optimized.

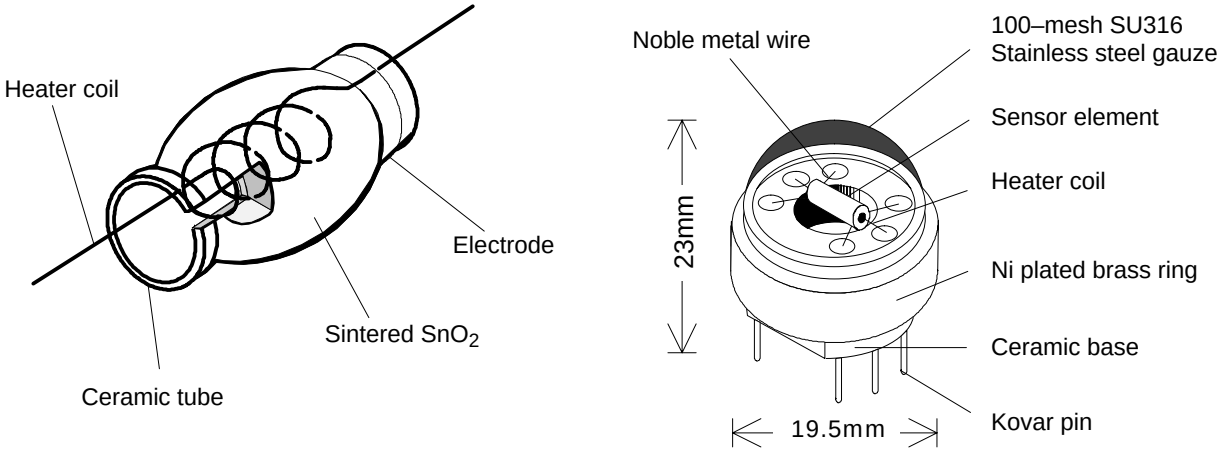

Fig. 4 Structure of the semiconductor element and a package configuration

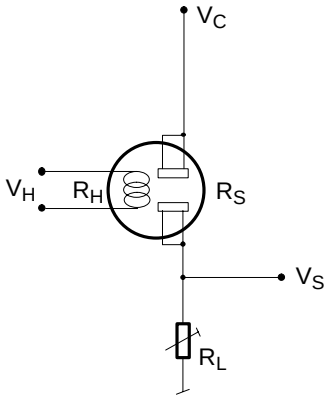

V_H	Heater Voltage
V_C	Circuit Voltage
V_S	Signal Voltage
R_H	Heater Resistance
R_S	Sensor Resistance
R_L	Load Resistance (var.)

Fig. 5 Basic measuring circuit

Features

- ↗ Long life and good reliability
- ↗ High sensitivity
- ↗ Quick response
- ↗ High resistance to poisoning
- ↗ Low cost
- ↘ Low selectivity
- ↘ Non–linear response
- ↘ High sensitivity to temperature and humidity

Applications

- Solvent leak detection (Alcohol, Hexan, Toluol, etc.)
- Ammonia leak detection
- Detection of refrigerants (R22, R134a, etc.) and halogenated hydrocarbons.

2.2.2 Catalytic Gas Detectors (Pellistors)

A pellistor is a miniature calorimeter used to measure the heat of oxidation of combustible (flammable) gases. Usually it consists of a platinum coil acting as heater and temperature detector simultaneously, embedded in a bead of a porous ceramic, impregnated with a catalyst, where the oxidation of the gas takes place. The measurement is made with a matched pair of elements: the active detector carries the catalyst, the compensating non–active element is passivated so that oxidation of the gas does not occur. The elements are connected into a Wheatstone Bridge circuit thereby registrating the gas concentration through the imbalance between them caused by the different reactions. The beads are heated to a temperature of around 500°C by the supply voltage.

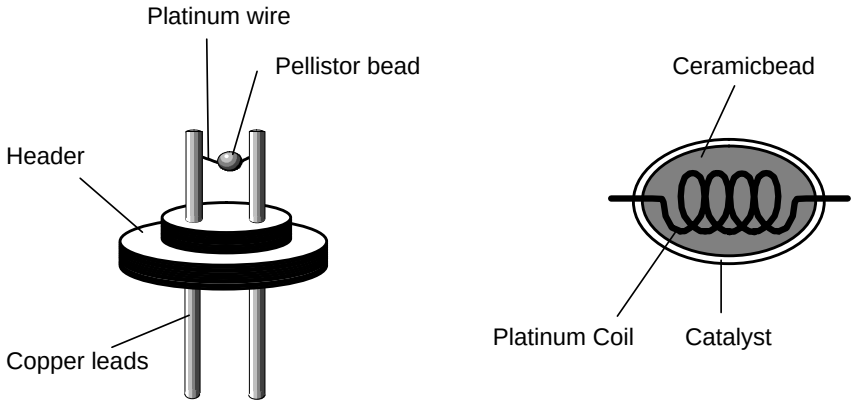

Fig. 6 Pellistor sensor

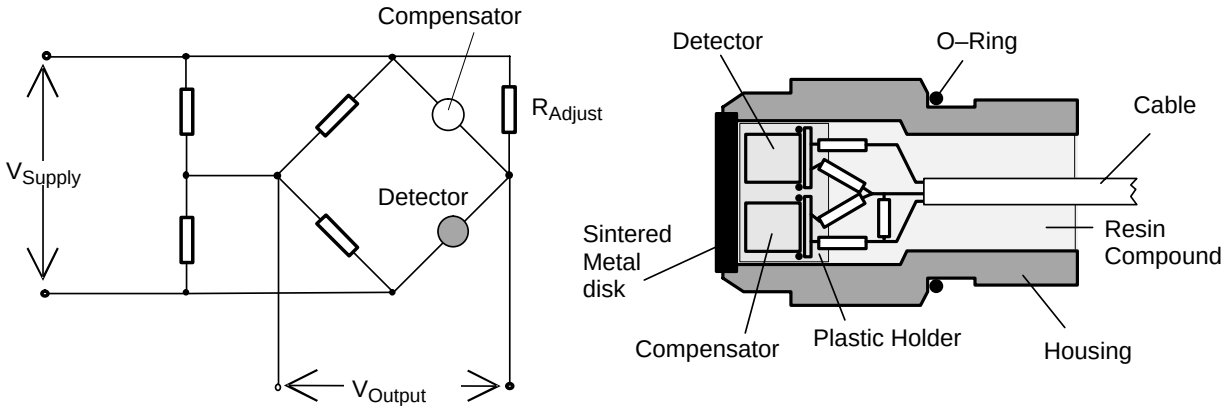

Fig. 7 Circuit diagram and CerGas assembly

Features

- ↗ Long life and good reliability
- ↗ Low cost
- ↗ Suitable for explosion protection
- ↗ Ex–proof housing
- ↘ Susceptible to catalytic poisons (silicone–, chlorine–, sulphur– or lead–compounds).
- ↘ No selectivity between flammable gases.
- ↘ Susceptible to mechanical shocks (transport and handling).

Applications

- Detection of flammable gases and vapours (explosion protection)

2.2.3 Electrochemical Cells

The most simple form of a fuel cell electrochemical sensor is a diffusion–limited metal–air battery comprising an anode, electrolyte and an air cathode (Fig. 8).

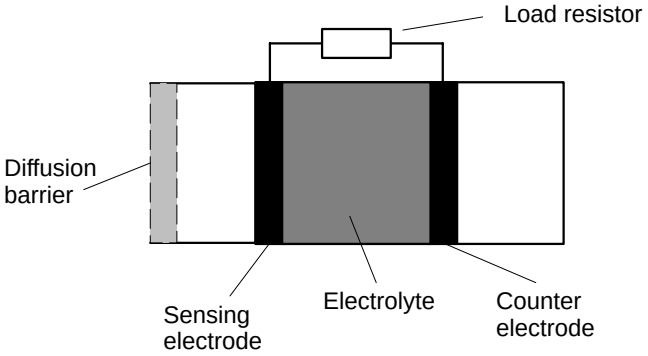

Fig. 8 Schematic diagram of an electrochemical sensor

If an electrochemically oxidizable gas (reducing gas), such as carbon monoxide (**CO**), is present in the ambient air, it will diffuse to the sensing electrode and cause its potential to shift. The resulting potential difference between the sensing electrode and counter–electrode will then cause a current to flow in the external circuit.

For a CO–Sensor the chemical reaction in the cell can be described as follows :

Sensing electrode :

$$\mathbf{2\ CO + 2\ H_2O \rightarrow 2\ CO_2 + 4\ H^+ + 4\ e^-}$$

Counter–electrode :

$$\mathbf{O_2 + 4\ H^+ + 4\ e^- \rightarrow 2\ H_2O}$$

Overall cell reaction :

$$\mathbf{2\ CO + O_2 \rightarrow 2\ CO_2}$$

An oxygen supply (from ambient air) must be provided to the counter–electrode to sustain the reaction. The above principle may be applied to measure any gaseous compound which can react electrochemically at the electrode. Examples of available sensors are O_2, NO_x, H_2S, Cl_2, NH_3 and many others. To compensate a polarisation of the counter–electrode, most sensors are equipped with three electrodes. All these sensors show linear and stable reactions, but are very short–lived. Operating times between 6 and 18 months are usual. Measuring ranges are of the order of 1..100 ppm depending on the gas.

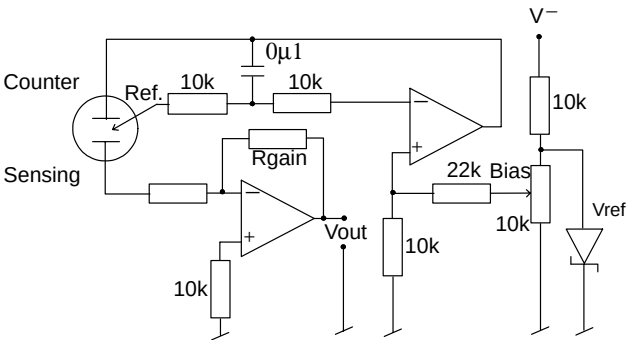

Fig. 9 Operating circuit of a three–electrode electrochemical sensor

Features

- ↗ Stable and linear signal
- ↗ Detection in the ppm range
- ↗ Low influence of temperature, humidity and shock
- ↘ Short life (~12 months). The lifetime is reduced, depending on the dose of gas.
- ↘ High price
- ↘ High cross–sensitivities to interfering gases

Applications

- Detection of various toxic gases in the ppm range.
- Control of TLV–levels at working places

2.2.4 Optoacoustic Sensor

A newly developed sensor using the property of many gas molecules, to absorb infrared radiation at specific wavelengths. The main parts of the sensor are a pulsed light–source, an optical filter letting through only the specific wavelength and a closed measuring chamber into which the gas enters by diffusion (See Fig. 10). Inside this cell a sensitive microphone is mounted, detecting the faint pressure fluctuations induced by the absorbed radiation energy. This new sensor can be used for measurements of **CO_2** and another one for Hydrocarbons, (where no cross–sensitivity to Hydrogen is important). The advantage of the photoacoustic technique against the differential measurement of IR–absorption is its high zero stability.

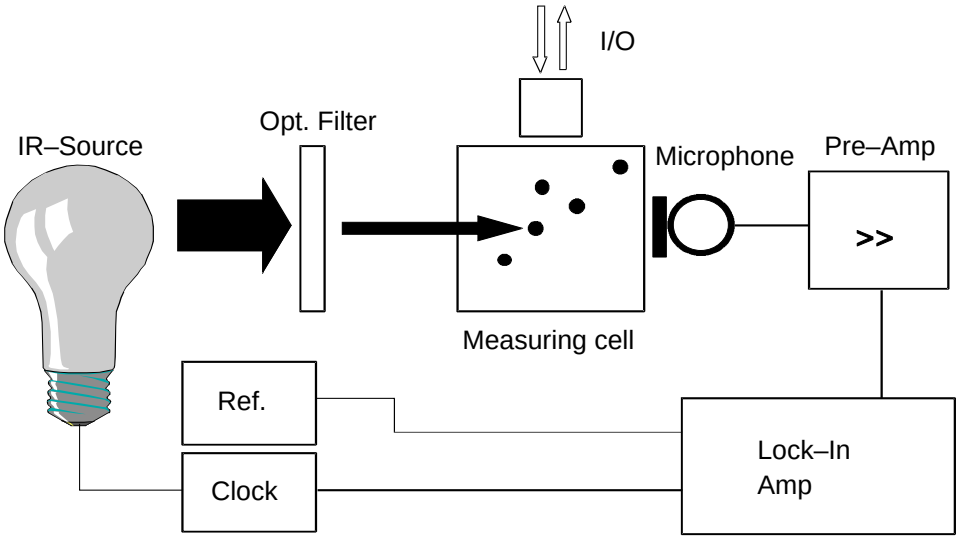

Fig. 10 Schematical representation of an optoacoustical sensor

Features

- ↗ Long life
- ↗ Stable Zero, low span drift
- ↗ Highly selective
- ↗ Resistant to poisoning
- ↘ Response–time ~1 Min.
- ↘ Susceptible to mechanical shocks and vibrations during operation (microphone!)
- ↘ Non–linear signal

Applications

- Detection of carbon dioxide for control of ventilation and air–conditioning, or control of atmospheric conditions in greenhouses, food–storages and breweries.
- Detection of hydrocarbons
- Detection of other gases is possible by choosing other wavelengths (different IR–filter).

3 Explosion Protection and TLV–Control

3.1 Introduction

The risks coming from any explosive or toxic gas are determined by its concentration in air. Combustible gases and vapours mixed with air are only explosive within a specific concentration range. It is defined by the **Lower Explosion Limit (LEL)** and the **Upper Explosion Limit (UEL)**. LEL–concentrations are in most cases a few volume–percent. Usually the measurements are expressed in percent of the lower explosion limit (100% LEL) and the sensors are calibrated at 40–60% LEL. Toxic gas concentrations are stated by its volume concentration in ppm (parts per million = 10^{-6}) or the mass concentration mg/m^3. For toxic gases **Threshold Limit Values (TLV)** are stated giving the maximum allowable concentration during a period of a 8 hours working day. This value corresponds to the ”Maximale Arbeitsplatzkonzentration” (MAK) and is sometimes called **Maximum Allowable Concentration (MAC)**. To express the importance of the dose of the toxic gas, the **Time Weighted Average (TWA)** over an 8 hours day is computed. Another important value often found in catalogues for toxic substances is the level **Immediately Dangerous to Life or Health (IDLH)**, giving the value where no irreversible effects occur under the condition that an escape from the dangerous area within 30 minutes is possible.

3.2 Explosion Protection

3.2.1 Pre–Conditions

To ignite a fire, three pre–requisites are necessary :
Combustible matter, oxygen and an ignition source
giving the starting energy. If the combustible matter is in a specific concentration range and located adequately, the velocity of the **oxidation** is increased until the reaction is called an **explosion**. If the occurring pressure rise is moving with ultrasonic velocities this is called a **detonation**. The conditions can be visualised in form of a triangle or square (Fig. 11).

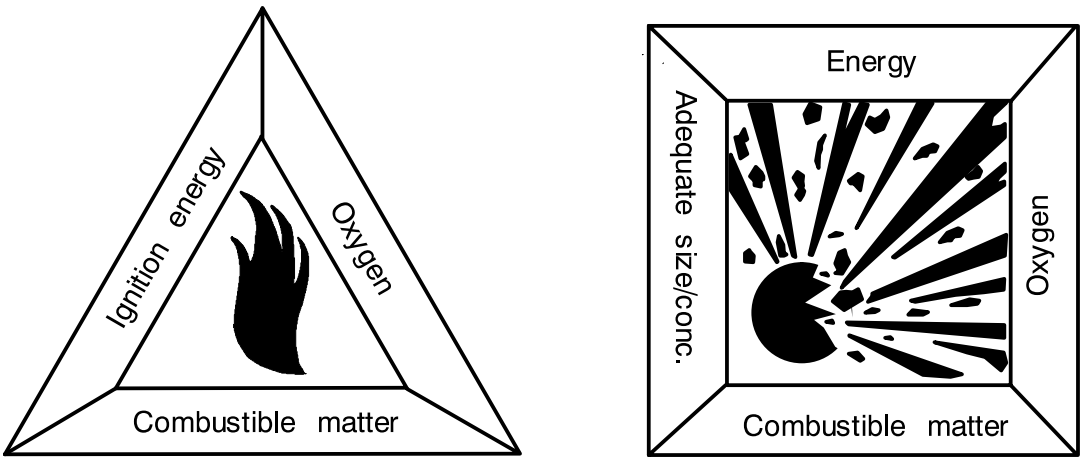

Fig. 11 Fire Triangle and Explosion Square

3.2.2 Explosion Limits

If a mixture of a combustible medium with air is too lean, it does not ignite; its concentration is below LEL. If the mixture is too rich, it cannot be ignited either; the concentration is above UEL. The range between these two levels which is specific for every gas or vapour is dangerous. Therefore, the gas sensors used for explosion protection detect concentrations below 100% LEL. Usual alarm levels are around 60% LEL (Fig. 12).

3.2.3 Flash Point

For flammable liquids, the **Flash Point** or **Flame Point** is the key property to assess the explosion
hazard. The flash point is the temperature of a liquid where its vapour pressure exceeds the LEL value of that substance. If this condition is fulfilled, the vapour can explode if there is an ignition source. Since all vapours of flammable liquids are heavier than air (molar weight larger than 28g/mole), they accumulate (in still air) near the surface of the liquid. Therefore the detectors for these applications must be located near the floor.

3.2.4 Ignition

The following ignition sources must be taken into consideration in practical applications :
➜ Open flames: Welding torches, matches, electric short circuits
➜ Hot surfaces: Heaters, heating–up of electrical equipment
➜ Mechanical sparks: Machining of metals
➜ Electric sparks: Electrostatic discharges, making and braking of contacts, lightning
The ignition source must have a **minimum ignition energy** in order to ignite an explosive mixture.
Therefore combustible materials are classified into categories according to their ignition risk.

3.2.5 Temperature Categories

Combustible gases and vapours are classified into **temperature categories** based on their ignition temperature (DIN 51794, EN 50014). Equipment for hazardous duty is classified according to its maximum surface temperature:

Temperature category	Max. permissible surface temperature
T1	450°C
T2	300°C
T3	200°C
T4	135°C
T5	100°C
T6	85°C

Carbon disulphide (**CS_2**) for example has an ignition temperature of 95°C and therefore falls into the temperature category T6.

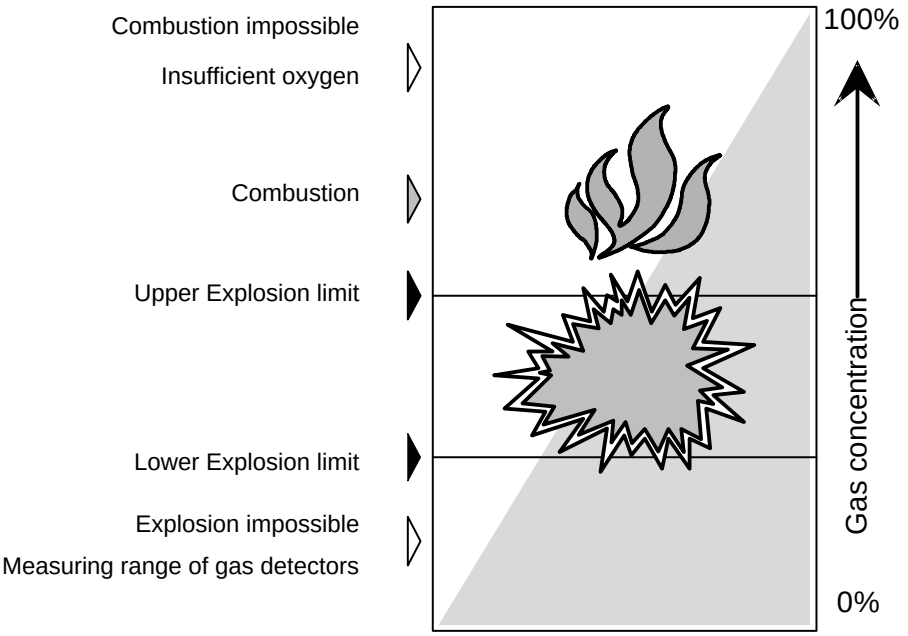

Fig. 12 Explosion range

3.2.6 Explosiveness Groups

Equipment for hazardous duty can be designed by encapsulating it in tight enclosures. In most cases it is not possible to provide a fully gastight enclosure. Therefore it is essential to prevent an ignition, taking place inside the apparatus, from igniting the explosive gas mixture outside the enclosure. This requirement is met if the width of the admissible **Maximum Experimental Safe Gap (MESG)** is not exceeded.
Electrical apparatus for potentially explosive atmospheres is divided into:

- Group I : Electrical apparatus for mines.
- Group II : Electrical apparatus for places with a potentially explosive atmosphere other than mines.

The following table illustrates this classification:

Explosiveness group (DIN 57165)	EN 50014	Max. safe gap
II A	A	>0.9mm
II B	B	>0.5..0.9mm
II C	C	<0.5mm

The majority of all combustible materials fall into the explosiveness group IIA or IIB. Few materials as carbon disulphide (**CS_2**), Hydrogen (**H_2**) or Acetylene (**C_2H_2**) fall into group IIC. If the complete range of materials is to be monitored, the detectors must meet the specifications of group IIC and temperature class T6 which is fulfilled for CerGas–detectors.

3.2.7 Classification of Hazardous Areas

All areas in which explosive gases or vapours may be present are classified according to the probability and duration of their occurrence.

Zone 0
Area in which a potentially explosive atmosphere is present either continuously or for extended periods (Inside of containers, reaction vessels).

Zone 1
Area in which a potentially explosive atmosphere will occur periodically or occasionally (Immediate neighbourhood of Zone 0 containers, filling sites).

Zone 2
Area in which a potentially explosive atmosphere is expected only rarely and for short periods (< 2 hours).
CerGas detectors are used in Zone 1 and 2.

3.2.8 Classification of CerGas Detectors

The CerGas detector housing (MG 60–02) and the corresponding sensor have the following Ex–designation:

EEx d IIC T6

CerGas detectors are certified by the European Ex–Approvals of CESI (Italy), INERIS (France), SEV (Switzerland) and PTB (Germany) according to EN 50014 and EN 50018. The detector housing has the protection type ”d”, meaning pressure–tight or flameproof housing (which can resist the pressure if an explosion occurs inside the housing and will therefore not transmit the explosion to the outside atmosphere).

3.3 TLV Control

3.3.1 Definition

The **Threshold Limit Value (TLV)** is the maximum or average (depending on the substance) atmospheric concentration of contaminants to which workers may be exposed for an eight–hour work day without injury to health.

3.3.2 Examples (CH 1997)

Substance	Formula	TLV [ppm]
Ammonia	NH3	20
Carbon monoxide	CO	30
Ethylene oxide	C2H4O	1
Hydrogen chloride	HCl	5
Hydrogen cyanide	HCN	10
Hydrogen sulfide	H2S	10
Nitric oxide	NO	25
Nitrogen dioxide	NO2	3
Sulfur dioxide	SO2	2

With toxic gas detectors, the lowest threshold level (**Warning**) is usually set to the TLV–value.

4 Appendix

4.1 Glossary

Atomic mass unit AMU : A measure of atomic mass, defined as equal to 1/12 the mass of a carbon atom of mass 12.

Atomic number An integer that expresses the number of protons in the nucleus.

Avogadro number The number of particles in one mole of substance.
$N_A = 6.022 \cdot 10^{23}$ /mole

Boiling point Temperature of transition between liquid and gas.

Catalytic poison Substance that permanently impairs the operation of catalytic detectors (pellistors); examples are silicone oils and greases, leaded fuels and phosphate esters.

Combustion Oxidation of a flammable material usually developing heat and flames and large quantities of CO_2 and H_2O.

Concentration The amount of substance in weight, mole or equivalents contained in one unit volume.

Critical point The thermodynamic state in which liquid and gas phase of a substance coexist in equilibrium at the highest possible temperature. At higher temperatures no liquid phase can exist.

Deflagration Fast oxidation of flammable materials with expansion velocities < 100m/s.

Density Concentration of matter, measured by the mass per unit volume.

Detonation Extremely rapid self–propagating oxidation of a flammable material accompanied by a high pressure rise and expansion velocities larger than 1000m/s.

Explosion Rapid oxidation of flammable materials with expansion velocities from 100 to 1000m/s.

Flash point Minimum temperature at which a liquid gives off sufficient vapour to form an ignitable mixture with air near the surface of the liquid or within a vessel.

Gas constant Constant factor in the equation of state of ideal gases.
R = 8.314 J/K mole

Ideal gas A gas which shows no interaction between its particles and conforms to the ideal gas law:

$$p \cdot V = n \cdot R \cdot T$$

p=pressure, V=volume, n=number of moles, R=gas constant, T=temperature

IDLH **I**mmediately **d**angerous to **l**ife or **h**ealth unless a withdrawal from the dangerous area is possible within 30 minutes.

Inhibitor Substance that temporarily impairs the operation of a pellistor sensor, for example substances containing halogens.

LEL Lower explosion limit. Lowest possible concentration of a combustible mixture that can be ignited.

MAK Maximale Arbeitsplatzkonzentration. Equivalent to TLV.

Melting point Temperature of transition between solid and liquid.

MESG **M**aximum **e**xperimental **s**afe **g**ap. Characteristic of flame–proof housings.

Mole volume The volume occupied by a mole of any gas measured at standard conditions:
$V_m = 22.414$ l/mole

Mole The amount of a substance which contains as many particles as there are atoms in 12g of carbon ^{12}C.

Mole weight	The sum of the atomic weights of all the atoms in a molecule.
Molecule	The smallest unit of matter which can exist by itself and retain all the properties of the original substance.
Oxidation	Any process which increases the proportion of oxygen in a compound.
PAS	**P**hoto–**A**coustic **S**pectroscopy
Pellistor	Two matched elements of one active and one passivated heated ceramic beads, used to detect flammable gases and vapours.
ppm	Parts per million (volume fraction)
Real gas	A gas where the particles have a finite size and have an attractive force between them, conforming to the Van der Waals equation of state: $$(p + \frac{a}{V^2}) \cdot (V - b) = n \cdot R \cdot T$$ a, b are specific constants for each gas.
Saturation vapour pressure	The pressure exerted when a liquid is in equilibrium with its own vapour. The vapour pressure is a function of the substance and of the temperature
Standard conditions	0°C and 1013hPa have been chosen as normal or standard conditions. Also designed as NTP = **N**ormal **T**emperature and **P**ressure.
States of aggregation	Three possible phases which all pure materials can adopt (solid, liquid and gaseous).
STEL	**S**hort **t**erm **e**xposure **l**imit. TWA concentration must not be exceeded during one workday for more than 15 minutes.
TLV	**T**hreshold **l**imit **v**alue: Maximum allowable concentration during a period of a 8 hours workday. Usually computed as a TWA–value.
Triple point	Thermodynamic state at which all three phases of a substance exist in equilibrium.
TWA	**T**ime **w**eighted **a**verage of a concentration value over an 8 hours workday.
UEL	Upper explosion limit. Highest possible concentration of a combustible mixture having enough oxygen to be ignited.
Vapour	The words vapour and gas are often used interchangeably. Vapour is more frequently used for substances, which are liquid at room temperature (20°C).
Vapour density	Ratio of the weight of a unit volume of a pure gas to the weight of an equal volume of dry air. It is determined by calculating the ratio of the molecular weight of the gas to the average molecular weight of dry air (29g/mole). A vapour density larger than 1.0 indicates that the gas is denser than air and will tend to sink to ground level and not dissipate as readily.

4.2 Properties of common combustible substances

Name	Formula	Mole Wt.	BP °C	Vap. Dens. Air=1	Liq. Dens. g/l	FP °C	LEL Vol.%	UEL Vol.%
Acetone	C_3H_6O	58.1	56	2.0	790	–19	2.15	13
Acetylene	C_2H_2	26.0	–84	0.9	–	–18	2.3	78
Ammonia	NH_3	17.0	–33	0.6	–	–20	15.4	33.6
Butane	C_4H_{10}	58.1	–1	2.1	–	–60	1.4	9.3
Butyl alcohol	C_4H_9OH	74.1	118	2.6	810	29	1.4	11.3
Carbon disulphide	CS_2	76.1	46	2.6	1260	–30	0.6	60
Carbon monoxide	CO	28.0	–191	0.97	–	–	10.9	76
Cyclohexane	C_6H_{12}	84.2	81	2.9	780	–18	1.2	8.3
Cyclopentane	C_5H_{10}	70.1	49	2.4	750	–51	1.5	8.7
Decane	$C_{10}H_{22}$	142.3	174	4.9	730	46	0.7	5.4
Diethyl ether	$(C_2H_5)_2O$	74.1	34	2.55	710	–20	1.7	36
Ethane	C_2H_6	30.1	–89	1.0	440	–135	2.7	14.7
Ethyl alcohol	C_2H_5OH	46.1	78	1.6	790	12	3.5	15
Ethylene	C_2H_4	28.0	–104	0.97	–	–136	2.3	32
Ethylene oxide	C_2H_4O	44.0	11	1.52	880	–18	2.6	100
Heptane	C_7H_{16}	100.2	98	3.46	680	–4	1.1	6.7
Hexane	C_6H_{14}	86.2	69	2.79	660	–21	1.0	8.1
Hydrogen	H_2	2.0	–253	0.07	–	–	4.0	77
Hydrogen sulphide	H_2S	34.0	–60	1.19	–	–	4.3	45.5
Methane	CH_4	16.0	–161	0.55	–	–	4.4	16.5
Methyl alcohol	CH_3OH	32.0	65	1.11	790	11	5.5	36
Nonane	C_9H_{20}	128.3	151	4.43	720	30	0.7	5.6
Octane	C_8H_{18}	114.2	126	3.94	700	12	0.8	6.5
Pentane	C_5H_{12}	72.2	36	2.48	630	–20	1.4	7.8
Propane	C_3H_8	44.1	–42	1.56	–	–	1.7	10.9
Toluene	C_7H_8	92.1	111	3.18	870	6	1.2	7.8
Xylene	C_8H_{10}	106.2	144	3.66	880	30	1.0	7.0

While CERBERUS has taken care to ensure the accuracy of the information contained herein, it accepts no responsibility for the consequences of any use thereof.

4.3 Properties of some toxic gases

Name	Formula	MAK* ppm	TLV* (TWA) ppm	STEL ppm	Odour threshold ppm
Ammonia	NH_3	50	25	35	5
Carbon dioxide	CO_2	5000	5000	30000	–
Carbon disulfide	CS_2	10	4	12	0.2
Carbon monoxide	CO	30	35	60	–
Chlorine	Cl_2	0.5	0.5	1	0.02
Ethylene oxide	C_2H_4O	1	1	5	700
Hydrogen chloride	HCl	5	5	10	5
Hydrogen cyanide	HCN	10	10	20	1
Hydrogen sulfide	H_2S	10	10	15	0.1

*) Treshold values vary from country to country! The values above are CH and USA figures (1997).

4.4 Bibliography

Properties of flammable and toxic gases

– CRC Handbook of Chemistry and Physics 72nd Ed. (1991), Lide, D.R. Ed., CRC Press, Boston
– Hazardous Chemicals Desk Reference (1987), Sax, N.I., Lewis, R.J., Van Nostrand, New York
– Fire Protection Guide to Hazardous Materials 10th Ed. (1991) NFPA (National Fire Protection Assoc.)
– Fire Protection Handbook 16th Ed. (1986) Cote, A.E. Ed., NFPA, Quincy MA
– Sicherheitstechnische Kennzahlen brennbarer Gase und Dämpfe (1991), Nabert, K., Schön, G., Deutscher Eichverlag, Braunschweig
– Handbuch der gefährlichen Güter (1980), Hommel, G.,Springer–Verlag, Berlin
– Grenzwerte am Arbeitsplatz 1997. MAK–Werte. SUVA 1903.d (1997), SUVA, Luzern
– Sicherheitstechnische Kenngrössen von Flüssigkeiten und Gasen. SUVA 1469.d (1997), Luzern.

Sensors

– Firth, J.G. (1981) Measurement of Flammable Gases and Vapours. In: *Detection and Measurement of Hazardous Gases* (C.F. Cullis, J.G. Firth, Ed.), Heinemann, London.
– Oehme, F. (1991) Chemische Sensoren, Vieweg, Braunschweig.
– Jones, E. (1987) The Pellistor Catalytic Gas Sensor. In: *Solid State Gas Sensors* (P.T. Moseley, B.C. Tofield, Ed.), Adam Hilger, Bristol.
– Möbius, H. (1992) Solid–State Electrochemical Potentiometric Sensors for Gas Analysis. In: *Sensors– A Comprehensive Survey*, Vol.3 (W. Göpel, J. Hesse, J.N. Zemel, Ed.) VCH, Weinheim.
– Hobbs, B.S. (1991) Liquid 4Electrolyte Fuel Cells. In: *Techniques and Mechanisms in Gas Sensing* (P.T. Moseley Ed. Adam Hilger, Bristol.

Siemens Building Technologies AG
Cerberus Division
CH-8708 Männedorf
Alte Landstrasse 411
Tel. +41 1 - 922 61 11
Fax +41 1 - 922 64 50
www .cerberus.ch

Cerberus
Security
for People
and Assets